www.bestblock.com

2 1/4x8x16 Solid Cap Block — Product No: 361500100

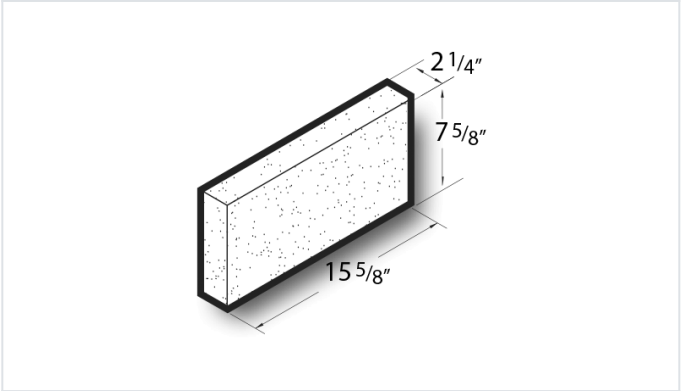

2 1/4x8x16 Solid Cap Block are also available in any other solid shapes or sizes your project requires. Contact your Best Block representative for special requests and additional options.

- Available in medium, normal, and light-weight varieties
- Competively priced and produced locally.
- Concrete blocks are naturally fire-resistent, highly durable, and its mass creates energy-efficient wall systems.
- Item weight and pallet count may vary by location.
- Contact your Best Block representative for more information.

Unit(s)

Product No.	361500100
Weight/Block:	21
Block/Pallet:	180
Pallet Weight:	3840