www.bestblock.com

4x8x8 Solid HP Block — Product No: 4024

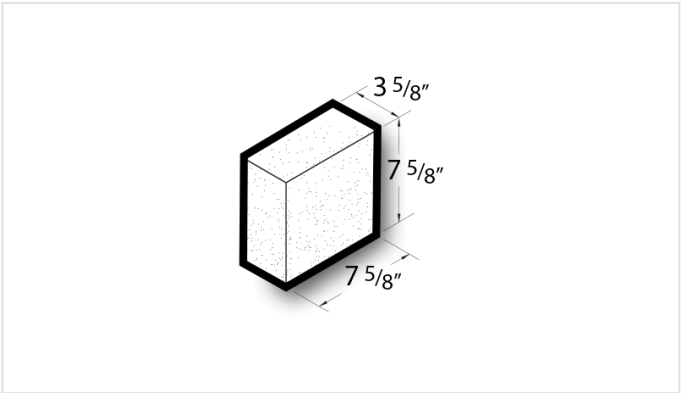

4x8x8 Solid HP Block are solid concrete masonry units intended for use as foundation piers in the construction of free-standing structures. Contact your Best Block representative for special requests and additional options.

- Available in medium, normal, and light-weight varieties
- Competively priced and produced locally.
- Concrete blocks are naturally fire-resistent, highly durable, and its mass creates energy-efficient wall systems.
- Item weight and pallet count may vary by location.
- Contact your Best Block representative for more information.

Unit(s)

Product No.	4024
Weight/Block:	17.5
Block/Pallet:	216
Pallet Weight:	3840