www.bestblock.com

5x8x72 (6 Ft) Car Stop — Product No: CS6

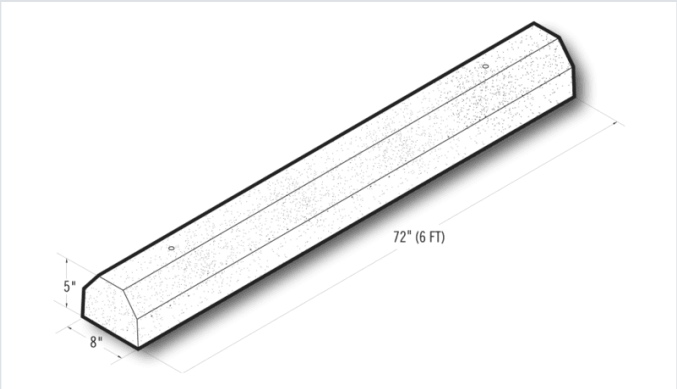

5x8x72 (6 Ft) Car Stops are also available in a variety of other shapes and sizes for what your project requires. Contact your Best Block representative for special requests and additional options.

- Available in medium, normal, and light-weight varieties
- Competively priced and produced locally.
- Concrete blocks are naturally fire-resistent, highly durable, and its mass creates energy-efficient wall systems.
- Item weight and pallet count may vary by location.
- Contact your Best Block representative for more information.

Unit(s)

Product No.	CS6
Weight/Block:	200
Block/Pallet:	15
Pallet Weight:	3060