www.bestblock.com

6x8x16 Split Face Block — Product No: 603000100

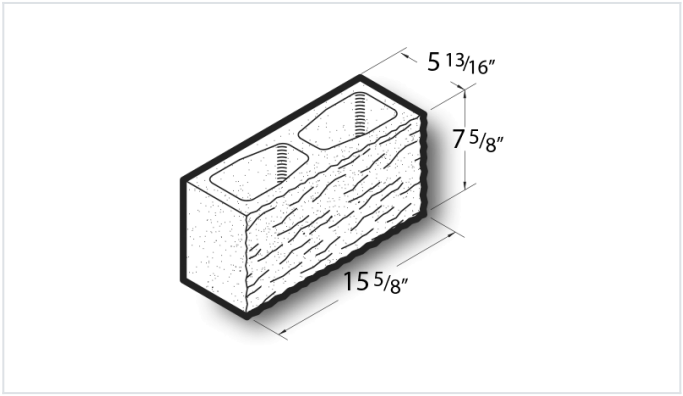

6x8x16 Split Face Block is architectural CMU that has the appearence of hand-chiseling to give wall designs a highly textured look. Contact your Best Block representative for special requests and additional options.

- Available in medium, normal, and light-weight varieties
- Competively priced and produced locally.
- Concrete blocks are naturally fire-resistent, highly durable, and its mass creates energy-efficient wall systems.
- Item weight and pallet count may vary by location.
- Contact your Best Block representative for more information.

Unit(s)

Product No.	603000100
Weight/Block:	30
Block/Pallet:	96
Pallet Weight:	2880

Available Colors


#12 Mojave Brown


#123 Alamo Red


#300 Island Sand


#437 Pecan


#5 Terra Cotta


#6 Grey Granite


#7 Burnt Umber


#700 White Limestone


#702 Limestone Cream


#704 White Terrazzo


#708 Pewter Terrazzo


#721 Walgreen Brown

BEST BLOCK
A QUIKRETE® COMPANY

www.bestblock.com


#725 Smoke


#8 Charcoal


#813 Limestone Buff


#9 Cream


Cocoa


Georgetown White


Gun Barrel


Midnight


Palomino


Paprika


Sandstone


Terra Cotta


Walnut Brown


Wet Stone