www.bestblock.com

8x8x16 Double Jamb Pilaster Block — Product No: 801021100

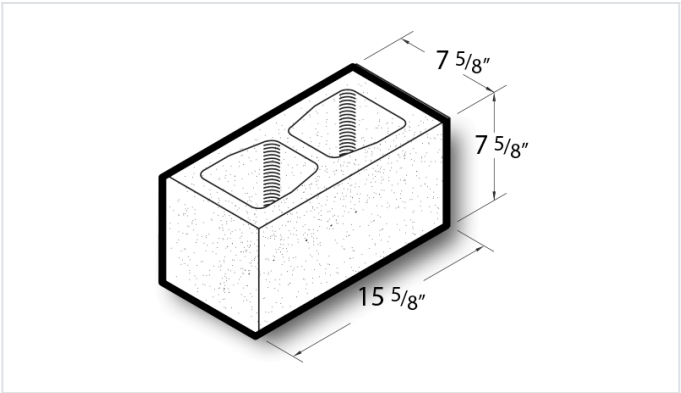

8x8x16 Double Jamb Pilaster Block is a standard concrete masonry unit (CMU) that exceeds ASTM C90 standard specifications in all weight classifications. Contact your Best Block representative for special requests and additional options.

- Available in medium, normal, and light-weight varieties
- Competively priced and produced locally.
- Concrete blocks are naturally fire-resistent, highly durable, and its mass creates energy-efficient wall systems.
- Item weight and pallet count may vary by location.
- Contact your Best Block representative for more information.

Unit(s)

Product No.	801021100
Weight/Block:	33
Block/Pallet:	90
Pallet Weight:	3030