www.bestblock.com

6x8x16 Polished Face Block — Product No: 605000000

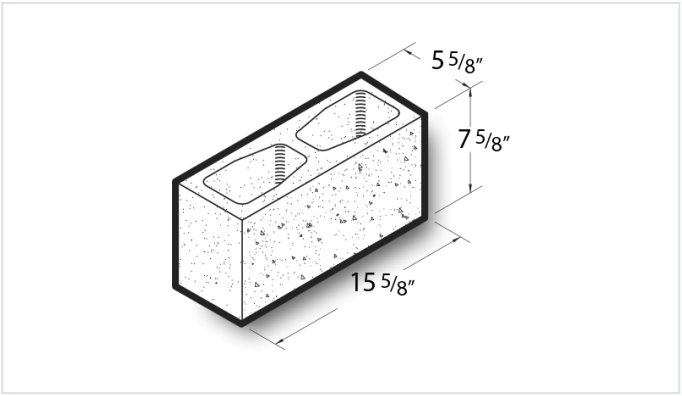

6x8x16 Polished Face Block are architectural CMU that are ground on their faces to expose the aggregate and creative a distinctive finish that adds a dynamic look to wall designs. Contact your Best Block representative for special requests and additional options.

- Available in medium, normal, and light-weight varieties
- Competively priced and produced locally.
- Concrete blocks are naturally fire-resistent, highly durable, and its mass creates energy-efficient wall systems.
- Item weight and pallet count may vary by location.
- Contact your Best Block representative for more information.

Unit(s)

Product No.	605000000
Weight/Block:	27
Block/Pallet:	96
Pallet Weight:	2652

Available Colors


#12 Mojave Brown


#123 Alamo Red


#300 Island Sand


#437 Pecan


#5 Terra Cotta


#6 Grey Granite


#7 Burnt Umber


#700 White Limestone


#702 Limestone Cream


#704 White Terrazzo


#708 Pewter Terrazzo


#721 Walgreen Brown

www.bestblock.com



#725 Smoke



#8 Charcoal



#813 Limestone Buff



#9 Cream